NARVA
manufaktur

AIRFIELD LIGHTING

vosla
GERMAN LIGHTING

"**NARVA manufaktur** ist ein exzellenter Partner für kundenspezifische Lösungen und zuverlässigen Service. Die Kombination aus jahrzehntelanger Erfahrung, das spezielle Know-how und die High-tech Lösungen der **vosla** GmbH sind der Schlüssel dafür."

"**NARVA manufaktur** is an excellent partner, providing customer-specific solutions and reliable service. Key to this is the combination of decades of experience, specialist expertise and the high-tech solutions of **vosla** GmbH."

Gerhard Liebscher
Geschäftsführer, vosla GmbH

Contents

Halogen airfield lamps – Dichroic reflector	4
Halogen airfield lamps – Prefocus (Pk), cable connection	6
Halogen airfield lamps – Connector overview	9
Halogen airfield lamps – Bi-Pin	10
Conventional airfield lamps – Prefocus	12
Airfield lamps – Cross-reference / Replacement Guide	14

NARVA manufaktur – Made in Germany

NARVA manufaktur präsentiert die über 60 Jahre währende Tradition als Produzent hoch spezialisierter Lichtquellen. Dazu gehört eine umfangreiche Palette von Halogen- und Standard-Glühlampen für Flugplatz-Landebahnen und Rollweg-Markierungen. Der aktuelle Industrie-Standard garantiert jederzeit einen einfachen Austausch der Leuchtmittel und macht diese zur perfekten Lösung, um die Zuverlässigkeit der Landebahnen- und Rollwegbeleuchtung zu verbessern.

Neben vielen Lampen mit nochmals verlängerter Lebensdauer garantieren alle Produkte eine hohe Zuverlässigkeit, lange Austauschzyklen und geringe Wartungskosten. Die Leuchtmittel entsprechen den Anforderungen der FAA, der ICAO sowie vielen weiterführenden nationalen und internationalen Vorschriften.

Alle Produkte sind blei- und quecksilberfrei. Zahlreiche Zertifizierungen verdeutlichen die Präzision der Produkte von **NARVA manufaktur**, weltweite Referenzen unterstreichen ihre außergewöhnliche Qualität.

NARVA manufaktur presents its history as a producer of highly specialised light sources, a tradition that has been ongoing for more than 60 years. This includes an extensive range of halogen and standard light bulbs for airport runways and taxiway markings. The current industry standard ensures that all lamps can be replaced easily, making this the perfect solution for improving the reliability of runway and taxiway lighting.

In addition to the many lights that now have an even longer lifespan, all products guarantee a high level of reliability, long replacement cycles and low maintenance costs. The lamps meet the requirements of the FAA, the ICAO and many leading national and international regulations.

All products are lead- and mercury-free. Numerous certifications illustrate the precision of the products made by **NARVA manufaktur**, while worldwide references emphasize their exceptional quality.

HALOGEN AIRFIELD LAMPS
Dichroic reflector

Description:
Halogen airfield lamp with
integrated reflector

Features / Benefits:
- High and constant lumen output
- Long lifetime
- Excellent optical adjustment
- Strong focus light

Application:
- Approach and threshold lights
- Runway and taxiway lights
- Stopbar and touch-down zone lights

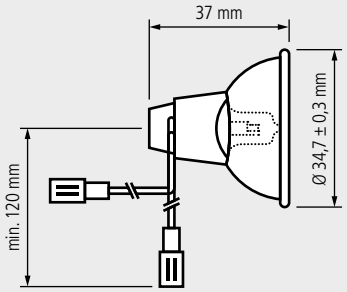

1

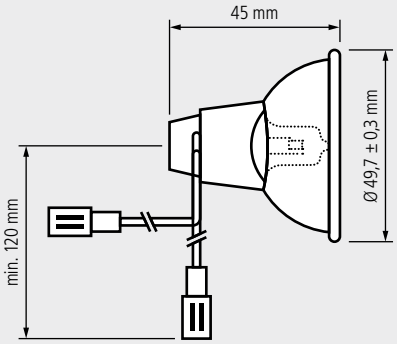

2

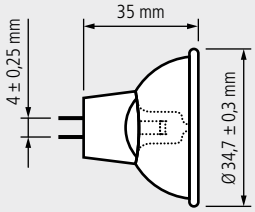

3

Type	Current A	Wattage W	Base	Axial light intensity kcd	Average life hrs.	Ordering number	
6144	6,6	30	cable flat female connector [3]	min. 16	1000	58334	2
58380	6,6	30	cable flat male connector [2]	min. 16	1000	58380	2
6137	6,6	35	GZ4	min. 4,5	1500	58314	3
6102	6,6	40	cable round female connector [1]	min. 10,5	1500	58302	1
6104	6,6	40	cable flat male connector [2]	min. 10,5	1500	58303	1
6110	6,6	40	cable flat female connector [3]	min. 10,5	1500	58301	1
6145LL	6,6	45	cable flat female connector [3]	min. 19,0	2500	58381	2
6146LL	6,6	45	cable round female connector [1]	min. 19,0	2500	58382	2
6101LL	6,6	48	cable flat female connector [3]	min. 20,0	2500	58304	2
6106LL	6,6	48	cable flat male connector [2]	min. 20,0	2500	58305	2
6107LL	6,6	48	cable round female connector [1]	min. 20,0	2500	58306	2
6109	6,6	48	cable round female connector [1]	min. 23,0	1000	58309	2
6143	6,6	48	cable flat female connector [6]	min. 23,0	1000	58333	2
58340	6,6	48	cable flat male connector [2]	min. 23,0	1000	58340	2
58356	6,6	48	cable flat female connector [3]	min. 23,0	1500	58356	2
6138	6,6	48	cable flat male / flat female [5]	min. 25,0	500	58317	2
6141	6,6	62	cable flat female connector [3] [4]	-	1500	58335	2
6142	6,6	62	GX5,3	-	1500	58336	
6103	6,6	105	cable round female connector [1]	min. 30,0	1000	58307	2
6105	6,6	105	cable flat female connector [3]	min. 30,0	1000	58308	2
6108	6,6	105	cable flat male connector [2]	min. 30,0	1000	58310	2

1) 4 mm diameter
2) flat male connector, complying with DIN 46248
3) flat female connector, complying with DIN 46247
4) 16" cable length
5) with 60 mm sleeve
6) with rectangular female connector

HALOGEN AIRFIELD LAMPS
Prefocus (Pk), cable connection

Description:
Halogen airfield lamp with prefocus base and cable connector

Features / Benefits:
- High and constant lumen output
- Long lifetime
- Excellent optical adjustment
- Cement free prefocus base

Application:
- Approach and threshold lights
- Runway and taxiway lights
- Stopbar and touch-down zone lights
- Visual approach slope indicator systems (e.g. PAPI)

Type	L1 max.	L2 max.
6303	36 mm	20 mm
6130	28 mm	21 mm
6132	32 mm	21 mm
6133	32 mm	21 mm
6304	32 mm	21 mm
6125	32 mm	21 mm
6116	36 mm	17 mm
6121	32 mm	21 mm
6118	35 mm	21 mm
6392	35 mm	21 mm
6313	36 mm	21 mm
6117	36 mm	21 mm
6139	36 mm	21 mm

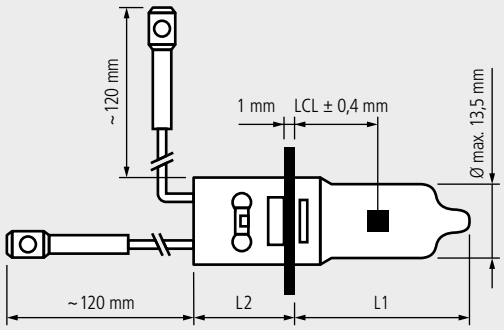

1

Type	Current A	Wattage W	Base	Connector	Lumens Lm	Average life hrs.	LCL mm	Filament	Ordering number	
6303LL	6,6	45	Pk30d	male	800	2000	16	C-8	58326	1
6130LL	6,6	45	PK30d	female	800	2000	16	C-8	58328	1
6132LL	6,6	45	PK30d	female	800	2000	20	C-8	58330	1
6133LL	6,6	45	PK30d	male	800	2000	20	C-8	58331	1
6304LL	6,6	65	PK30d	male	1450	2000	20	CBAR-6	58337	1
6125LL	6,6	65	PK30d	female	1450	2000	20	CBAR-6	58338	1
6116LL	6,6	100	Pk30d	male	2700	2000	20	CBAR-6	58347	1
6121LL	6,6	100	PK30d	female	2700	2000	20	CBAR-6	58349	1
6118LL	6,6	150	PK30d	female	3600	2000	20	CBAR-6	58369	1
6392LL	6,6	150	PK30d	male	3600	2000	20	CBAR-6	58368	1
6313LL	6,6	200	Pk30d	male	4400	2000	20	CC-6	58376	1
6117LL	6,6	200	Pk30d	male	4800	2000	20	CC-6	58377	1
6139LL	6,6	200	Pk30d	female	4800	2000	20	CC-6	58378	1

HALOGEN AIRFIELD LAMPS
Connector overview

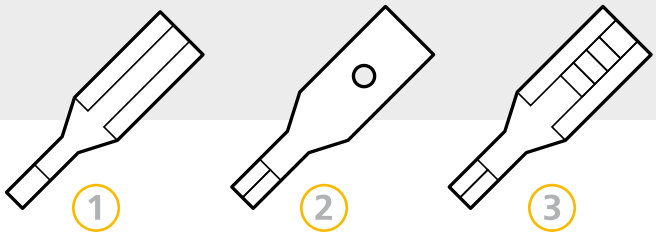

Round female connector

for contacts with 4 mm diameter

Flat male connector

complies with DIN 46248

Flat female connector

complies with DIN 46247

HALOGEN AIRFIELD LAMPS
Bi-Pin

Description:
Halogen airfield lamp with Bi-pin base

Features / Benefits:
- High and constant lumen output
- Long lifetime
- Small size

Application:
- Approach and threshold lights
- Runway and taxiway lights
- Obstruction lights

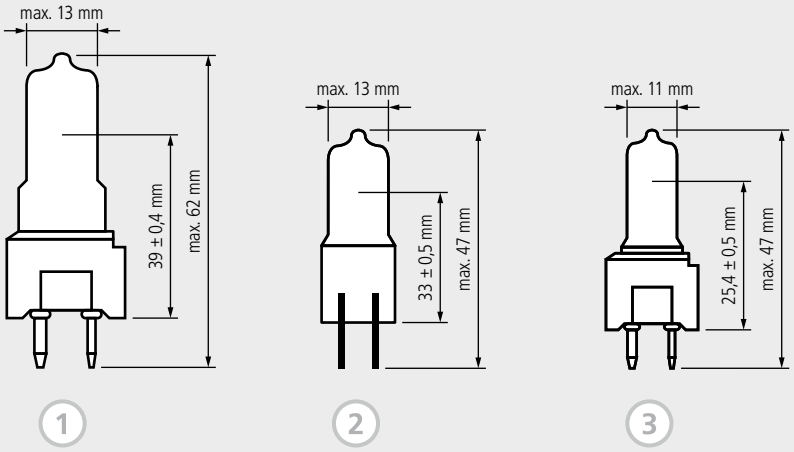

Type	LIF ANSI	Current A	Wattage W	Base	Lumens Lm	Average life hrs.	LCL mm	Filament	Ordering number	
6112LL	EXL	6,6	30	GZ9,5	375	2000	25,4	C-8	58312	3
6315	J1/75	6,6	36	G6,35	610	1500	33	C-8	58315	2
6123	J1/57	6,6	45	G6,35	840	1500	33	C-8	58323	2
6134LL	EXM	6,6	45	GZ9,5	800	1500	25,4	C-8	58325	3
6343	J1/58	6,6	100	G6,35	2300	1200	33	CBAR-6	58343	2
6128	EVV	6,6	120	GZ9,5	3150	500	39	CBAR-6	58355	1
6292	EWR	6,6	150	GZ9,5	3750	750	39	CBAR-6	58365	1
6373	J1/39	6,6	200	G6,35	4700	1200	33	CBAR-6	58373	2
6372LL	EZL	6,6	200	GZ9,5	5000	1300	39	CBAR-6	58374	1

CONVENTIONAL AIRFIELD LAMPS
Prefocus

Description:
Conventional incandescent airfield lamp

Features / Benefits:
- Lamp for constant current regulated series circuits

Application:
- Elevated approach lights
- Runway and taxiway lights
- Obstruction lights

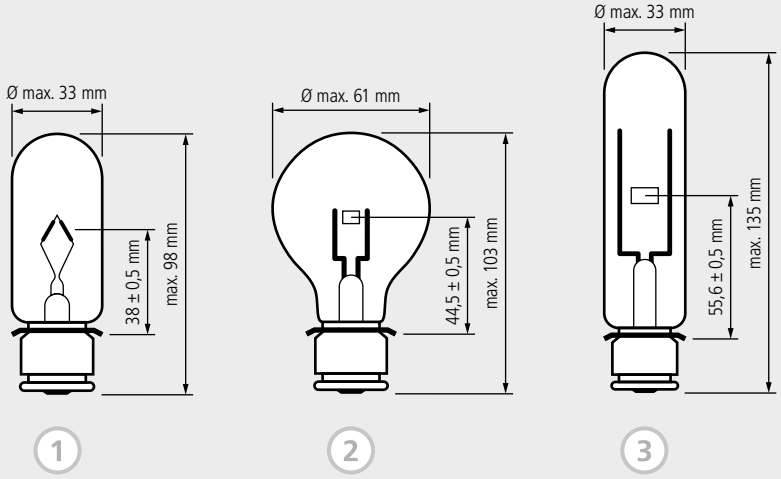

Type	Current A	Wattage W	Base	Lumens Lm	Average life hrs.	LCL mm	Filament	Ordering number	
7669C	6,6	30	P28s	450	1000	38	C-2V	67830	1
7669H	**6,6**	**30**	**P28s**	**450**	**2000**	**38**		**58318**	1
7654C	6,6	45	P28s	730	1000	38	C-2V	67845	1
7654H	**6,6**	**45**	**P28s**	**730**	**2000**	**38**		**58320**	1
7668C	6,6	100	P28s	1850	1000	38	C-2V	67851	1
7670C	6,6	200	P28s	4600	200	44,5	CC-6	67860	2
6936C	6,6	210	P28s	4500	300	55,6	C-13	67861	3

Remark: bold marked types are Halogen Long life types

AIRFIELD LAMPS
Cross-reference / Replacement Guide

GE types	Equivalent NARVA types
EVV	6128
EWR	6292
EXL	6112
EXM	6134
EZL	6372
Q200/T4/CL	6372
Q6.6A45PK30d-m	6303
Q6.6A45PK30d-f	6130
Q6.6A100PK30d-m	6116
Q6.6A100PK30d-f	6121
Q6.6A150PK30d-m	6392
Q6.6A150PK30d-f	6118
Q6.6A200PK30d-m	6117
Q6.6A200PK30d-f	6139
6,6A/T10P	7654C or H
6,6A/T10/1P	7669C or H
6,6A/T10/2P	7668C
6,6A/T14P	-
6,6A/T14/2P	-
6,6A/T14/3P	6936C

SLI types	Equivalent NARVA types
L2352 / 24522	6107
L2354 / 21518	6139
L2358 / 21496	6101
L2359 / 21497	6106
L2362 / 24526	6103
L2368 / 21498	6105
L2369 / 21499	6108
L2370 / 21500	6102
L2373 / 21483	6144
L2500 / 21757	6112
L2501 / 21686	6134
L2502 / 24529	6292
L2504 / 21696	6372
L2505 / 24531	6128
L2511 / 22214	6123
L2513 / 22212	6343
L2514 / 22211	6373
L2517 / 21480	6315

OSRAM types	Equivalent NARVA types
58750	6372
58798	6128
64316	6133
64317 C 45-10	6303
64317 IRC-A 45-30	6130
64317 IRC-C 45-30	6303
64318 A 45-10	6130
64318 Z/C 45-10	6303
64319 A 45-10	6132
64319 Z/C 45-10	6133
64319 IRC-A 45-30	6132
64319 IRC-C 45-30	6133
64320	6134
64321	6123
64322	6112
64328 HLX-A 65-10	6125
64328 HLX-Z/C 65-10	6304
64331 SP-A 30-10	6144
64333 A 40-15	6110
64333 B 40-15	6102
64333 C 40-15	6104
64337 A 45-15	6145
64337 B 45-15	6146
64337 A 48-10	6143
64337 C 48-10	-
64337 A 48-15	58356
64337 B 48-15	6107
64337 C 48-15	6106
64338 AC	6138
64339 A 105-10	6105
64339 B 105-10	6103
64339 C 105-10	6108
64341 HLX-A 100-15	6121
64341 HLX-Z/C 100-15	6116
64342 HLX-A 100-15	6116
64342 HLX-C 100-15	6121
64346	6343
64354	6292
64361 HLX-A 150-15	6118
64361 HLX-Z/C 150-15	6392
64382 HLX-A 200-15	6139
64382 HLX-C 200-15	6117
64386	6373

NARVA manufaktur

vosla GmbH
L.-F.-Schönherr-Straße 15
08523 Plauen, Germany
phone +49 3741 396 712

www.vosla-shop.com
www.vosla.com

Notizen

Edition 2015 www.breitband-agentur.de